ML–135
TYPE 2 / TYPE 3

BUILT TO ATF SPECIFICATIONS

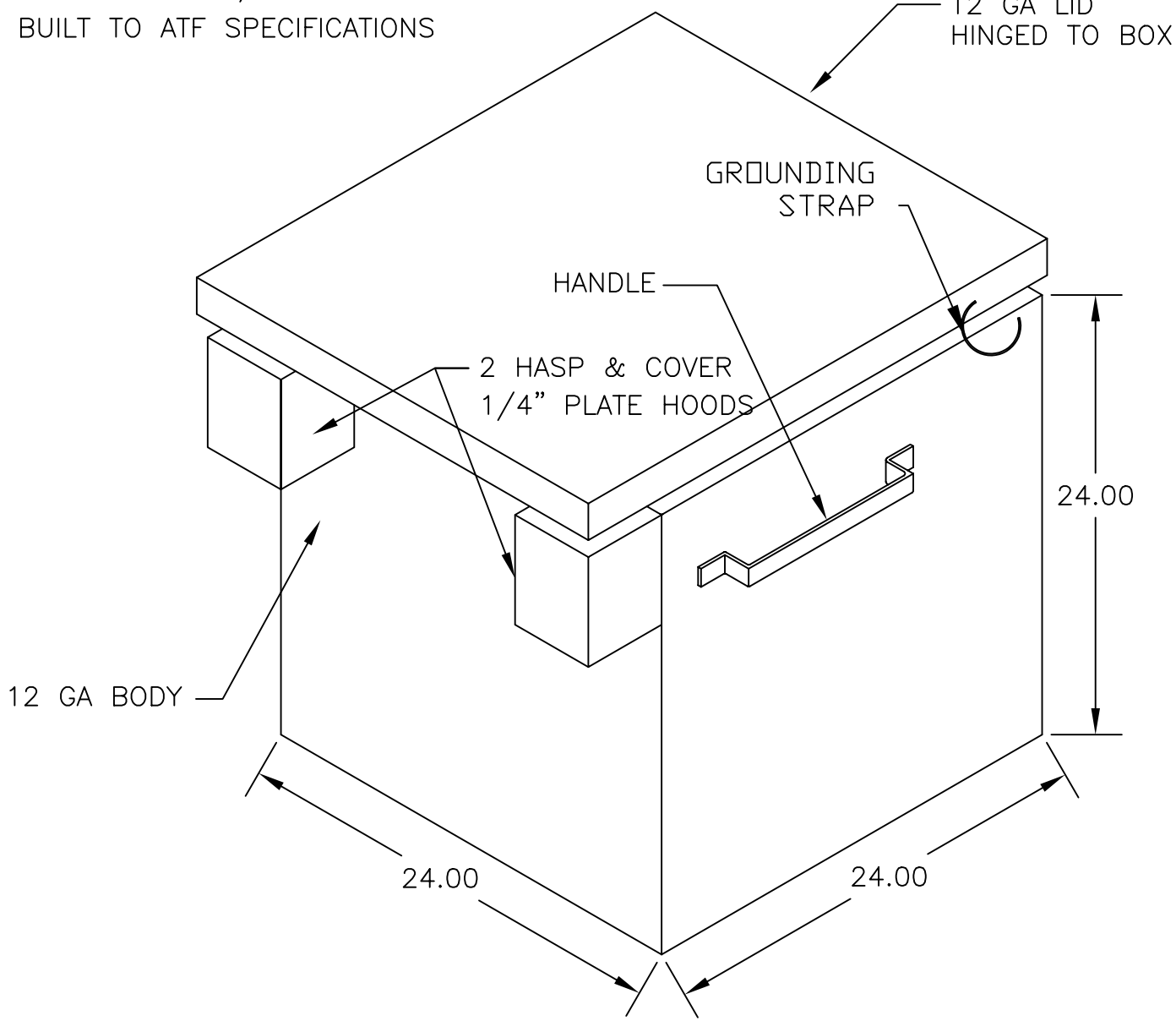

GENERAL NOTES:
1- ALL MATERIAL AND WORKMANSHIP SHALL CONFORM WITH THE REQUIREMENTS OF THE LATEST REVISION OF THE UBC 1997. DESIGN ACCORDING TO AISC, ASD, AND WITH ANSI/ ASCE 7-95.
2- NO LOADS OTHER THAN THOSE GIVEN UNDER "DESIGN DATA" BELOW SHALL BE IMPOSED ON THE "STUCTURE."
DESIGN DATA (MATERIALS)
STRUCTURAL QUALITY ASTM SPECIFICATION, A36 ER70S WELDING WIRE.
DESIGN DATA IN ACCORDANCE WTH ANSI/ ASCE 7-95:

ALL DIMENSIONS SHOWN ON THIS PRINT ARE FOR YOUR REFERENCE. TOLERANCES ARE ±1" UNLESS OTHERWISE NOTED.

DATE: 01/30/06

DRAWN BY: BT

APPROVAL PRINT

THIS PRINT IS CONFIRMATION OF YOUR ORDER AND ILLUSTRATES THE APPROXIMATE LOCATION OF FACTORY INSTALLED OPTIONS. CUSTOMER APPROVAL IS REQUIRED BEFORE MANUFACTURING CAN BEGIN.
ANY CHANGES MADE AFTER CUSTOMER APPROVAL MAY INCUR EXTRA CHARGES AND DELAY ESTIMATED DELIVERY.

SIGNATURE

PLEASE PRINT NAME DATE

LEGAL NOTE
THIS DRAWING IS THE PROPERTY OF U.S. CHEMICAL STORAGE, LLC. ANY DUPLICATION OF THIS DRAWING IN WHOLE OR IN PART IS STRICTLY FORBIDDEN. ANYONE DOING SO WILL BE PROSECUTED UNDER THE FULL EXTENT OF THE LAW.

U.S. EXPLOSIVE storage®

MANUFACTURING FACILITY

1806 River Road, Hwy 268 W.
Wilkesboro, NC 28697
PHONE: 1.888.583.9823
FAX: 1.336.838.0045